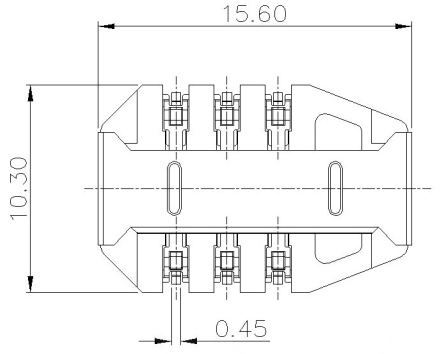

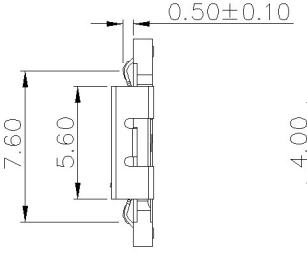

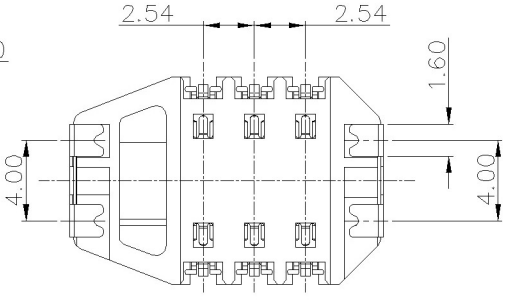

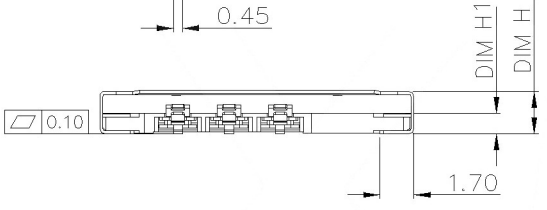

2FF SIM CARD

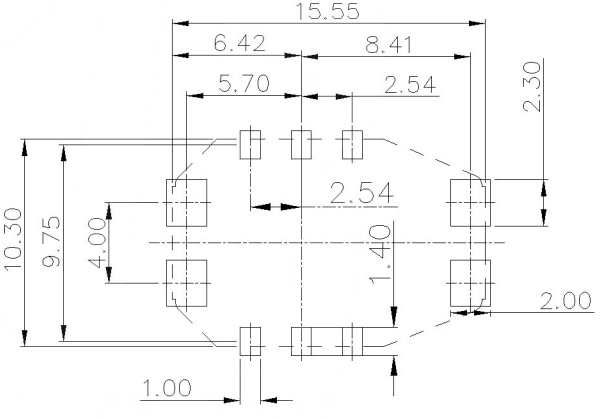

RECOMMENDED P.C.B LAYOUT

TOLERANCE ±0.05MM

③	Shell	1	SUS	
②	Terminal	6	COPPER ALLOY	
①	Housing	1	HI-TEMP.PLASIC UL 94V-0	BLACK
ITEM	PAPT NAMF	QTY	MATERIAL	FINISHING

SEE TABLE

XKSIM-036-B	2.70	1.60	
PART NO.	DIM H	DIM H1	NOTE

MARK	DESCRIPTION	DATE	REVISED	APPROVED
△X				
△X				
△X				

REVISIONS

ANGLAR	±5°
L≤4	±0.2
4<L≤16	±0.3
16<L≤63	±0.4
L>63	±0.5

UNSPECIFIED TOLERANCES

www.bodongkaiguan.net www.ksdkg.com

DSND		DATE		SCALE: N/A	MODEL TYPE: SIM CARD CONN
DWN		DATE		VIEW:	PART NO.:
CHKD		DATE		UNIT: mm	DWG NO.: XKSIM-036-B
APPD		DATE		SIZE: A4	

KOSOD TECHNOLOGY CO., LTD

WEIGHT	SHEET	REVISION
1.0g	1/1	A0