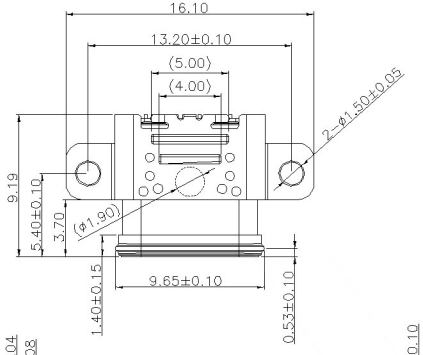

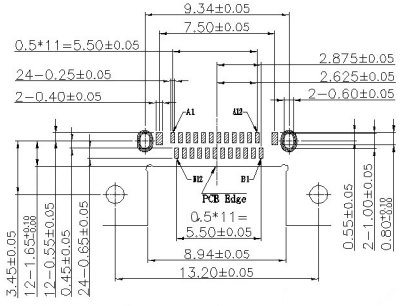

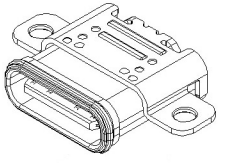

Pin	Signal Name	Mating Sequence	Pin	Signal Name	Mating Sequence
A1	GND	First	B12	GND	First
A2	SSTXp1	Second	B11	SSRXp1	Second
A3	SSTXn1	Second	B10	SSRXn1	Second
A4	Vbus	First	B9	Vbus	First
A5	CC1	Second	B8	SBU2	Second
A6	Dp1	Second	B7	Dn2	Second
A7	Dn1	Second	B6	Dp2	Second
A8	SBU1	Second	B5	CC2	Second
A9	Vbus	First	B4	Vbus	First
A10	SSRXn2	Second	B3	SSTXn2	Second
A11	SSRXp2	Second	B2	SSTXp2	Second
A12	GND	First	B1	GND	First
SHELL		GND	SHELL		GND

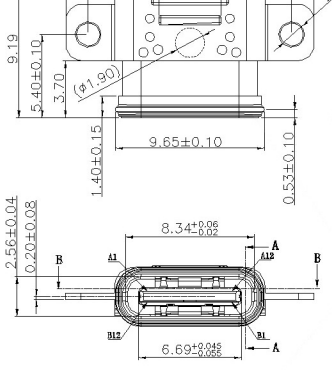

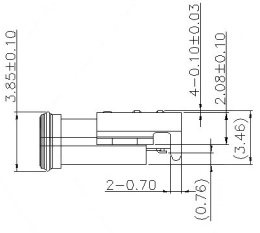

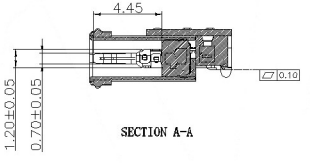

SECTION A-A

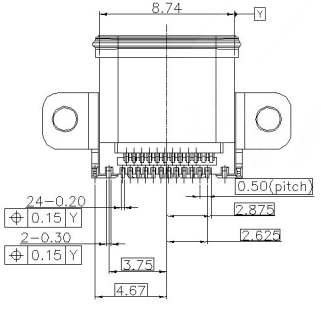

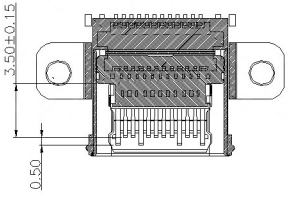

SECTION B-B

Material
Housing Material: High temperature thermoplastic
Contact Terminal: High Grade Copper Alloy
Metallic Shell: Stainless Steel
Cover Shell: Iron
Inner Ground Cover Shell: Stainless Steel
Mid Plate: Stainless Steel
Plating
Data Contact
Underplating: 50μ" Min. Nickel
Contact Plating: 1μ" Gold
Solder Area: 80μ" Matte Tin
Shell
Metallic Shell: 50μ" Min. Nickel
Cover Shell
Metallic Shell: 80μ" Min. Nickel
Inner Ground Cover Shell
Metallic Shell: 50μ" Min. Nickel
Electrical
Voltage Rating: 20V DC
Current Rating: Vbus pins collectively 5.00A, GND pins collectively 6.25A, B5 pin 1.25A, Other pins 0.25A per pin.
Contact Resistance: 40mΩ Max.
Insulation resistance: 100 MΩ MIN.
Dielectric withstanding voltage: 100V AC/Minute
Mechanical
Durability: 10,000 cycles
Mating Force: 5 to 20N
Unmating Force: 8 to 20N (post test)

MARK	DESCRIPTION	DATE	REVISED	APPROVED
ΔX				
ΔX				
ΔX				

REVISIONS

UNSPECIFIED TOLERANCES	
ANGLAR	±5°
L≤ 4	±0.2
4<L≤ 16	±0.3
16<L≤ 63	±0.4
L> 63	±0.5

DSND		DATE		SCALE: N/A	MODEL TYPE: USB3.1-TYPE-C-FSABD
DWN		DATE		VIEW:	PART NO.:
CHKD		DATE		UNIT: mm	DWG NO.: USB3.1-TYPE-C-FSABD
APPD		DATE		SIZE: A4	

KOSOD TECHNOLOGY CO., LTD

WEIGHT	SHEET	REVISION
1.0g	1/1	A0

www.bodongkaiguan.net www.ksdkg.com