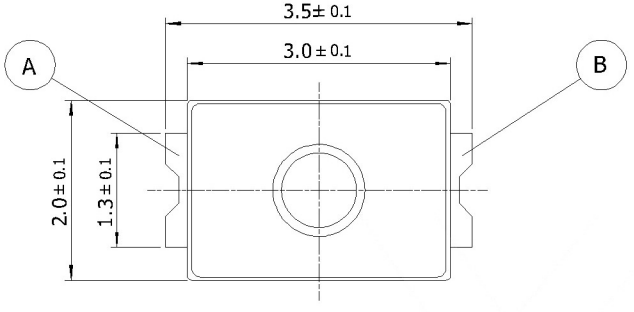

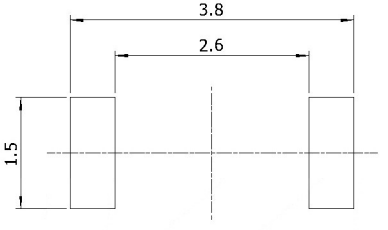

PCB SOLDER LAND DIMENSIONS

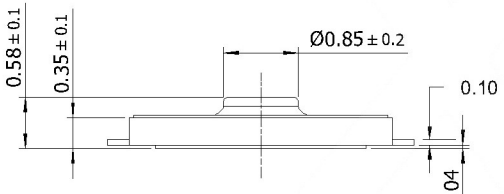

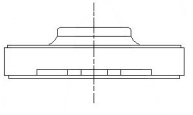

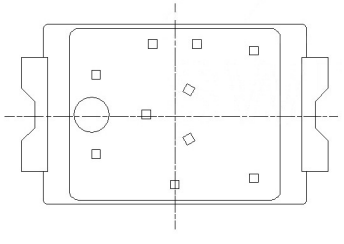

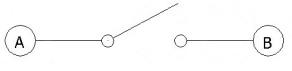

CIRCUIT DIAGRAM

SPECIFICATION

Contact Rating：	50mA,12V DC
Contact Resistance：	100mΩ max
Insulation Resistance：	100mΩ min.500V DC
Dielectric Strength：	250V AC/1minute
Travel：	0.13mm
Operating Temp：	-30℃~+85℃
Storage Temp：	-30℃~+80℃

PAPT NO	TS-2030-2-X
Operating Force	B:160gf C:260gf
Height	H:0.58

ITEM	PAPT NAMF	TER,NO	QTY	MATERIAL	FINISHING	REMARK
⑤	Terminal	——	2	Brass（0.30t）	Plating silvering	——
④	Contact	——	1	F.ag/Sus	Natural	——
③	Base	——	1	Lcp		——
②	Cover	——	1	Polyamide	Plating Nickel	——
①	Keystake	——	1	Pet		——

MARK	DESCRIPTION	DATE	REVISED	APPROVED
△X				
△X				
△X				

REVISIONS

UNSPECIFIED TOLERANCES	
units:	mm
tolerance:	
X.X	±0.2mm
X.XX	±0.1mm
X.XXX	±0.05mm

DSND		DATE		SCALE: N/A	MODEL TYPE: TACT SWITCH
DWN		DATE		VIEW:	PART NO.:
CHKD		DATE		UNIT: mm	DWG NO.: TS-2030-2-X
APPD		DATE		SIZE: A4	

KOSOD TECHNOLOGY CO., LTD

WEIGHT	SHEET	REVISION
1.0g	1/1	A0

www.bodongkaiguan.net www.ksdkg.com