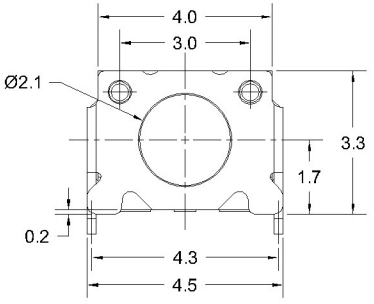

CIRCUIT DIAGRAM

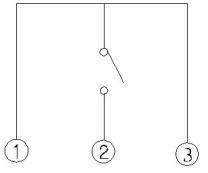

SMD REFLOW PATTERN

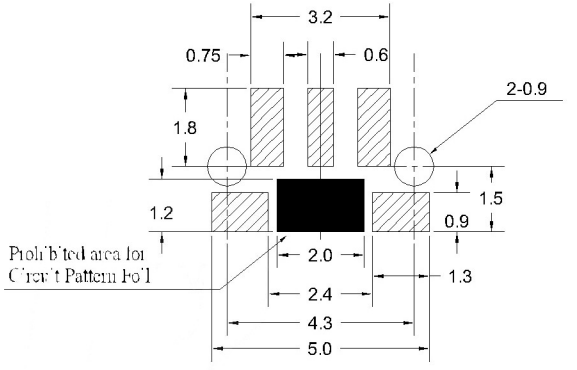

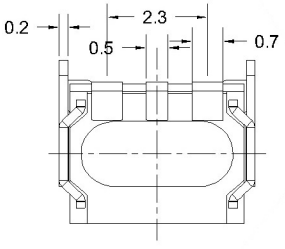

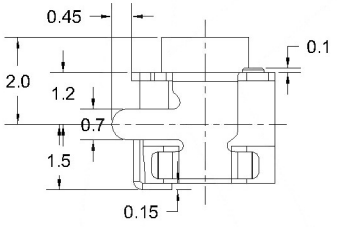

PAPT NO	TS-1133-X-A
Operating Force	A:100gf B:160gf C:260gf
Keystake	A:PA46: B:Silica gel

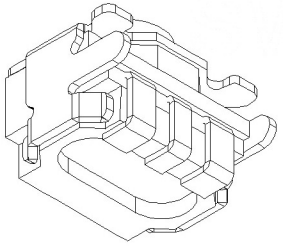

SPECIFICATION

Contact Rating：	50mA,12V DC
Contact Resistance：	100mΩ max
Insulation Resistance：	100mΩ min.500V DC
Dielectric Strength：	250V AC/1minute
Travel：	0.20mm
Operating Temp：	-30℃~+85℃
Storage Temp：	-30℃~+80℃

ITEM	PAPT NAME	TER,NO	QTY	MATERIAL	FINISHING	REMARK
⑤	Terminal	——	3	Brass（0.30t）	Plating silvering	——
④	Contact	——	1	F.ag/Sus	Natural	——
③	Base	——	1	Pa46		——
②	Cover	——	1	Spcc	Plating Nickel	——
①	Keystake	——	1	Pa46		——

MARK	DESCRIPTION	DATE	REVISED	APPROVED
△X				
△X				
△X				

REVISIONS

units:	mm				
tolerance:					
X.X	±0.2mm				
X.XX	±0.1mm				
X.XXX	±0.05mm				

UNSPECIFIED TOLERANCES

www.bodongkaiguan.net www.ksdkg.com

DSND		DATE		SCALE: N/A	MODEL TYPE: TACT SWITCH
DWN		DATE		VIEW:	PART NO.:
CHKD		DATE		UNIT: mm	DWG NO.: TS-1133-X-A
APPD		DATE		SIZE: A4	

KOSOD TECHNOLOGY CO., LTD

WEIGHT	SHEET	REVISION
1.0g	1/1	A0