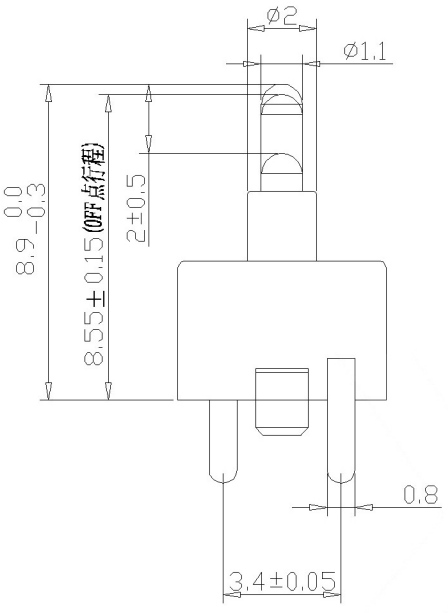

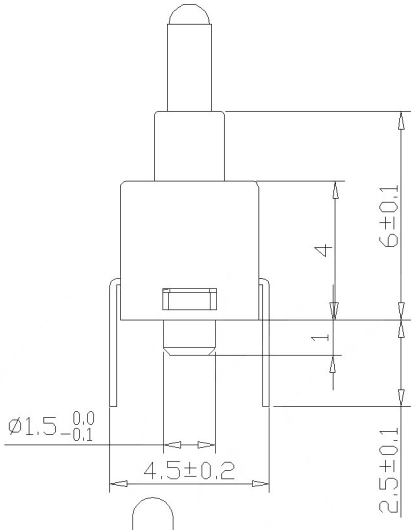

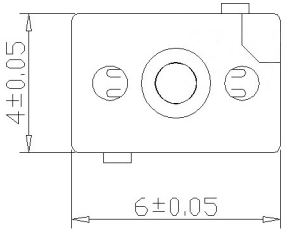

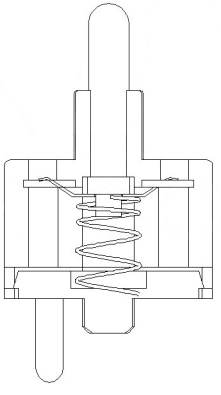

Specifications

CONTACT RATING: 0.1A @ 30 VDC.
MECHANICAL & ELECTRICAL LIFE: 50,000 cycles.
CONTACT RESISTANCE: 150 Ωmax. initial.
INSULATION RESISTANCE: 100 MΩmin. @ 100 VDC.
OPERATING TEMPERATURE: −20°C to +70°C.
DIELECTRIC STRENGTH: 100 volts AC @ 60 Hz.
PACKAGING: Bulk.

ITEM	PAPT NAMF	TER,NO	QTY	MATERIAL	FINISHING	REMARK
⑥	Spring		1	Sus	Natural	
⑤	Contact Spring	——	1	Phosphor Bronze	Plating silver	——
④	Terminal	——	2	Phosphor Bronze	Plating silver	——
③	Base	——	1	Nylon		——
②	Cover	——	1	Nylon		——
①	Keystake	——	1	Nylon		——

MARK	DESCRIPTION	DATE	REVISED	APPROVED
△X				
△X				
△X				

REVISIONS

ANGLAR	±5°
X.X	±0.2mm
X.XX	±0.1mm
X.XXX	±0.05mm

UNSPECIFIED TOLERANCES

www.bodongkaiguan.net www.ksdkg.com

DSND		DATE		SCALE: N/A	MODEL TYPE: DETECT SWITCH
DWN		DATE		VIEW:	PART NO.:
CHKD		DATE		UNIT: mm	
APPD		DATE		SIZE: A4	DWG NO.: TM-W-09

Kosod Technology Co., Ltd.

WEIGHT	SHEET	REVISION
1.0g	1/1	A0