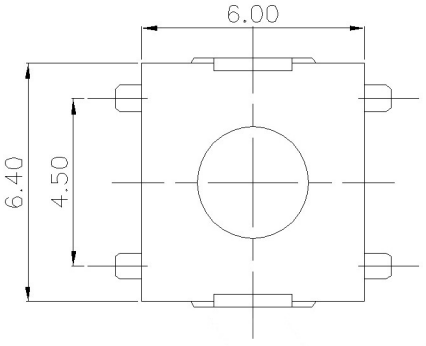

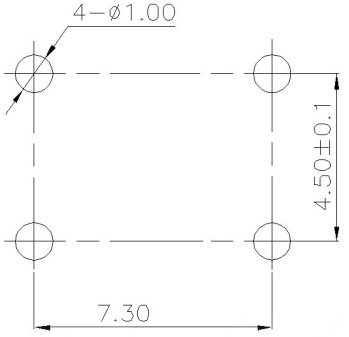

PCB Layout(Pattern side)

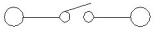

Circuit Diagram

Code-X	H
A	2.5
B	3.2
C	3.4
D	5.5

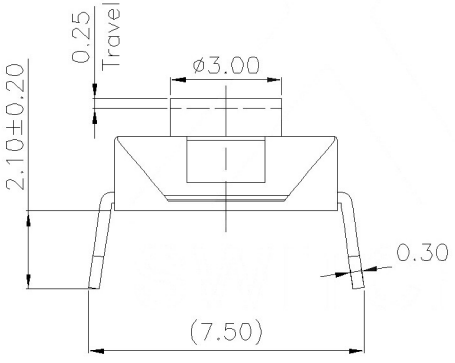

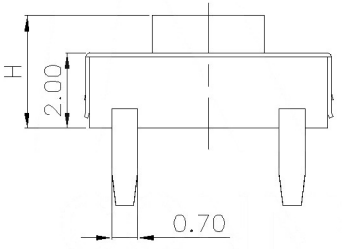

SPECIFICATION

Contact Rating:	50mA,12V DC
Contact Resistance:	100mΩ max
Insulation Resistance:	100mΩ min.500V DC
Dielectric Strength:	250V AC/1minute
Travel:	0.25mm
Operating Temp:	-30℃~+85℃
Storage Temp:	-30℃~+80℃

PAPT NO	TC-1157-X-X
Operating Force	A:100gf B:160gf C:260gf
Height	Code-X

ITEM	PAPT NAME	TER.NO	QTY	MATERIAL	FINISHING	REMARK
⑤	Terminal	—	4	Brass (0.30t)	Plating silvering	—
④	Contact	—	1	F.ag/Sus	Natural	—
③	Base	—	1	Pa46		—
②	Cover	—	1	Spcc	Plating Nickel	—
①	Keystake	—	1	Pa46		—

MARK	DESCRIPTION	DATE	REVISED	APPROVED
△X				
△X				
△X				

REVISIONS

units:	mm	
tolerance:		
X.X	±0.2mm	
X.XX	±0.1mm	
X.XXX	±0.05mm	

UNSPECIFIED TOLERANCES

www.bodongkaiguan.net www.ksdkg.com

DSND		DATE		SCALE: N/A	MODEL TYPE: TACT SWITCH
DWN		DATE		VIEW:	PART NO.:
CHKD		DATE		UNIT: mm	DWG NO.: TC-1157-X-X
APPD		DATE		SIZE: A4	

KOSOD TECHNOLOGY CO., LTD

WEIGHT	SHEET	REVISION
1.0g	1/1	A0