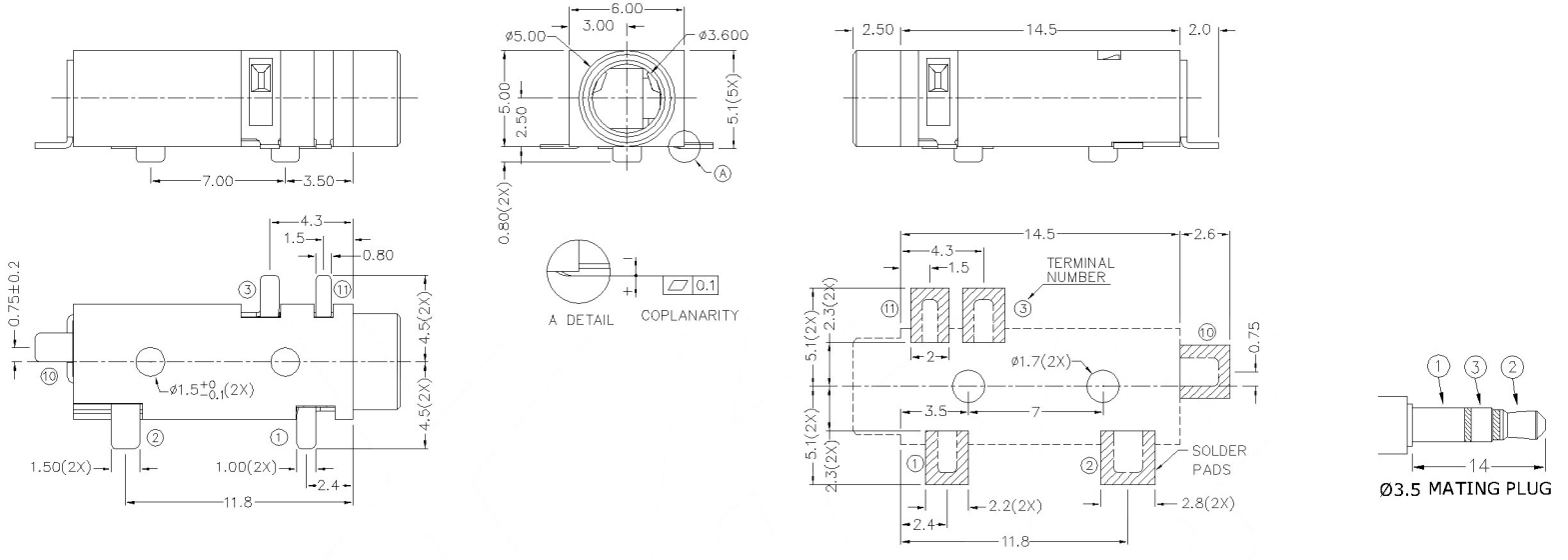

Recommended PCB Layout
Top View

color	B: Black R: Red G: Green

Model No.	PJ-3280-X-SMT	PJ-3281-X-SMT	PJ-3282-X-SMT	PJ-3283-X-SMT	PJ-3284-X-SMT
Schematic	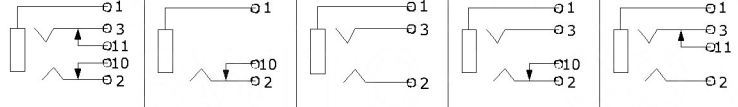				
PIN					
1	sleeve	sleeve	sleeve	sleeve	sleeve
2	tip	tip	tip	tip	tip
3	NP	ring	ring	ring	ring
10	tip switch	NP	tip switch	NP	tip switch
11	NP	NP	NP	ring switch	ring switch

	MATERIAL	PLATING
terminal 1	Phosphor Bronze	tin
terminal 2	Phosphor Bronze	tin
terminal 3	Phosphor Bronze	tin
terminal 10	Brass	tin
terminal 11	Brass	tin
plastic	High Temp. Thermoplastic	

MARK	DESCRIPTION	DATE	REVISED	APPROVED
△X				
△X				
△X				

REVISIONS

UNSPECIFIED TOLERANCES	
ANGLAR	±5°
X.X	±0.2mm
X.XX	±0.1mm
X.XXX	±0.05mm

www.bodongkaiguan.net www.ksdkg.com

DSND		DATE		SCALE: N/A	MODEL TYPE: 3.5 PHONE JACK
DWN		DATE		VIEW:	PART NO.:
CHKD		DATE		UNIT: mm	DWG NO.: PJ-328X-X-SMT
APPD		DATE		SIZE: A4	

KOSOD TECHNOLOGY CO., LTD

WEIGHT	SHEET	REVISION
1.0g	1/1	A0