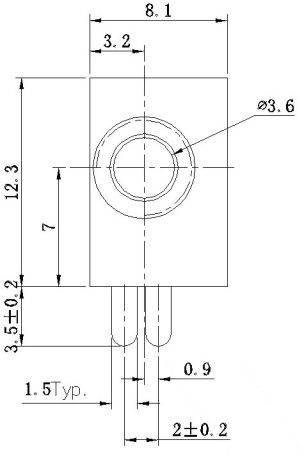

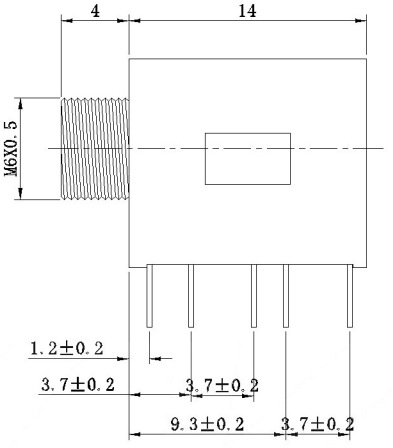

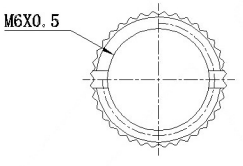

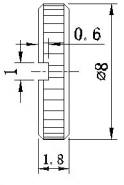

P.C.B LAYOUT
TOP VIEW

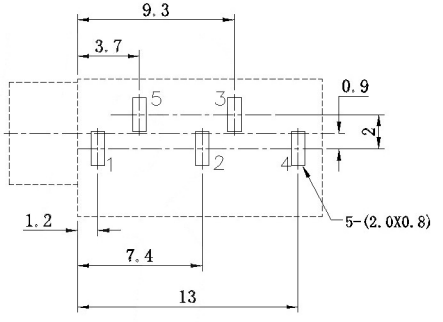

SCHEMATIC

PJ-325M	PJ-325M1	PJ-325M2	PJ-325M3
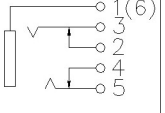	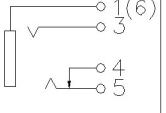	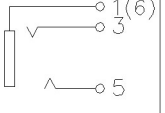	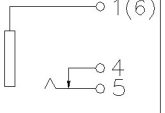

	MATERIAL	PLATING
terminal 1	Phosphor Bronze	tin
terminal 2	Brass	tin
terminal 3	Phosphor Bronze	tin
terminal 4	Brass	tin
terminal 5	Phosphor Bronze	tin
plastic	Pbt	

MARK	DESCRIPTION	DATE	REVISED	APPROVED
△X				
△X				
△X				

REVISIONS

UNSPECIFIED TOLERANCES	
ANGLAR	±5°
X.X	±0.2mm
X.XX	±0.1mm
X.XXX	±0.05mm

www.bodongkaiguan.net www.ksdkg.com

DSND		DATE		SCALE: N/A
DWN		DATE		VIEW:
CHKD		DATE		UNIT: mm
APPD		DATE		SIZE: A4

Kosod Technology Co., Ltd.

MODEL TYPE: 3.5 PHONE JACK

PART NO.:

DWG NO.: PJ-325MX

WEIGHT	SHEET	REVISION
1.0g	1/1	A0