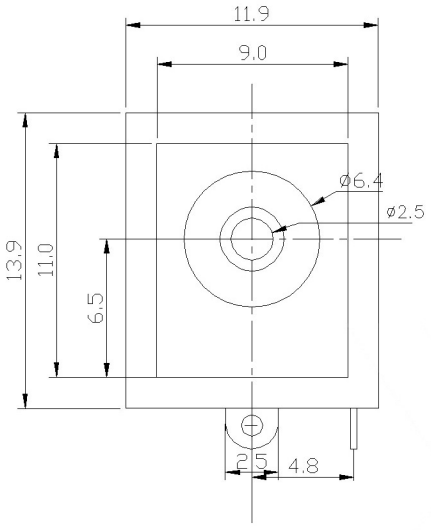

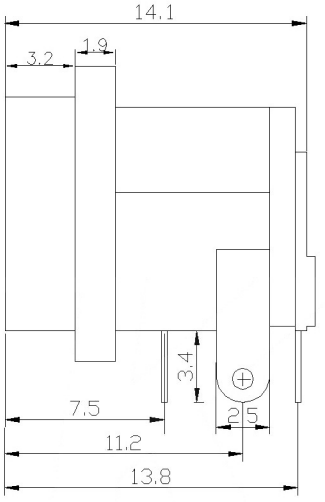

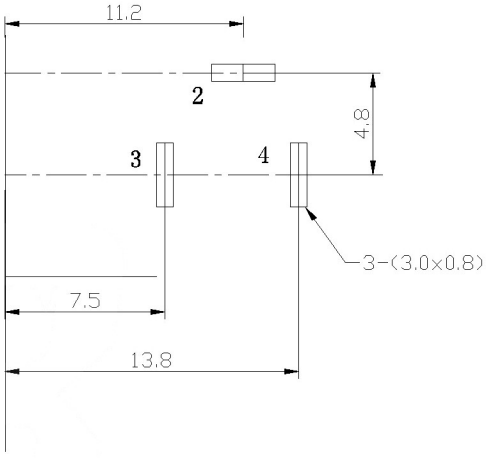

SCHEMATIC

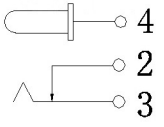

	MATERIAL	PLATING
center pin	Brass	tin
terminal 2	Brass	tin
terminal 3	Sus	tin
terminal 4	Brass	tin
plastic	Pbt	

MARK	DESCRIPTION	DATE	REVISED	APPROVED
△x				
△x				
△x				

REVISIONS

ANGLAR	±5°
X.X	±0.2mm
X.XX	±0.1mm
X.XXX	±0.05mm

UNSPECIFIED TOLERANCES

www.bodongkaiguan.net www.ksdkg.com

DSND		DATE		SCALE: N/A	MODEL TYPE: DC POWER JACK
DWN		DATE		VIEW:	PART NO.:
CHKD		DATE		UNIT: mm	DWG NO.: DC-063-2.5A-2.5
APPD		DATE		SIZE: A4	

KOSOD TECHNOLOGY CO., LTD

WEIGHT	SHEET	REVISION
1.0g	1/1	A0