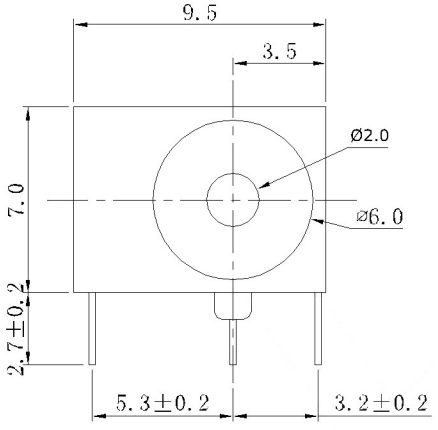

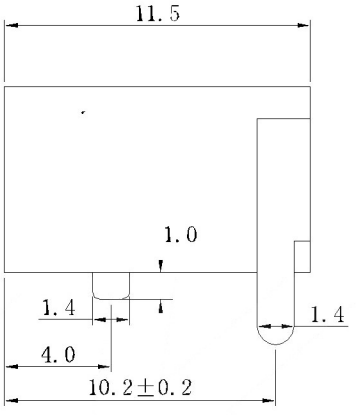

P.C.B LAYOUT
TOP VIEW

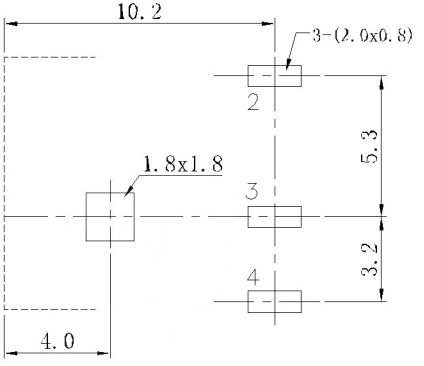

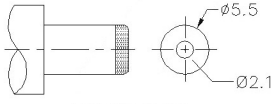

MATING PLUG
Jack Insertion Depth: 8.2 mm

SCHEMATIC	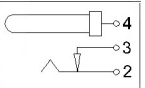
Model	DC-0440-2.5A
Center Pin	Ø1.65 mm
	Ø2.0 mm
	Ø2.5 mm

	MATERIAL	PLATING
center pin	Brass	silver
terminal 1	Brass	silver
terminal 2	Phosphor Bronze	silver
terminal 3	Brass	silver
plastic	Pbt	

MARK	DESCRIPTION	DATE	REVISED	APPROVED
△X				
△X				
△X				

REVISIONS

ANGLAR	±5°
X.X	±0.2mm
X.XX	±0.1mm
X.XXX	±0.05mm

UNSPECIFIED TOLERANCES

www.bodongkaiguan.net www.ksdkg.com

DSND		DATE		SCALE: N/A	MODEL TYPE: DC POWER JACK
DWN		DATE		VIEW:	PART NO.:
CHKD		DATE		UNIT: mm	DWG NO.: DC-0440-2.5A-2.0
APPD		DATE		SIZE: A4	

KOSOD TECHNOLOGY CO., LTD

WEIGHT	SHEET	REVISION
1.0g	1/1	A0