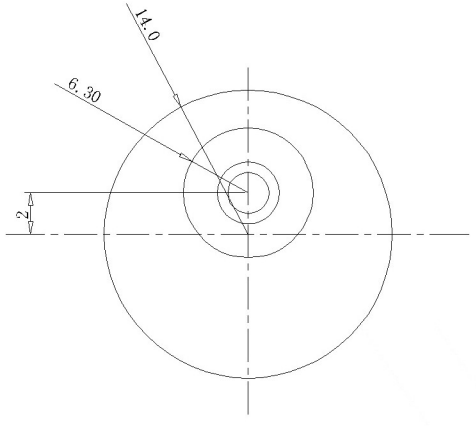

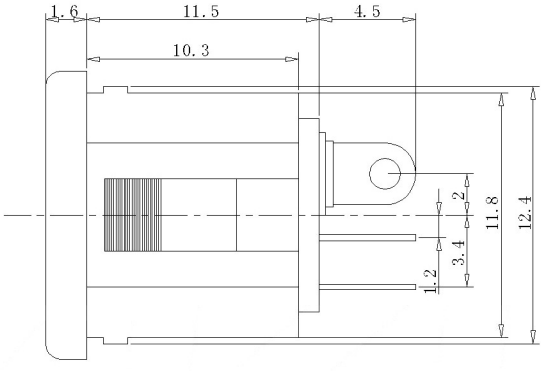

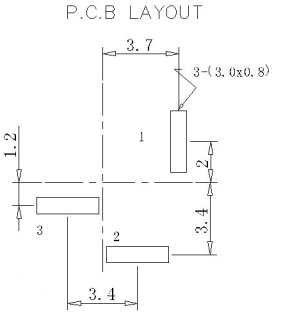

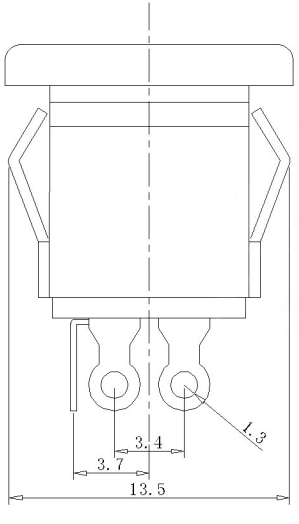

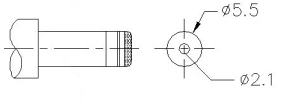

MATING PLUG
Jack Insertion Depth: 9.15 mm

SCHEMATIC	
Model	DC-022K
Center Pin	Ø2.0 mm
	Ø2.5 mm

	MATERIAL	PLATING
center pin	Brass	tin
terminal 1	Brass	tin
terminal 2	Sus	tin
terminal 3	Brass	tin
plastic	Pbt	
cover	Pf	

MARK	DESCRIPTION	DATE	REVISED	APPROVED
△X				
△X				
△X				

REVISIONS

ANGLAR	±5°
X.X	±0.2mm
X.XX	±0.1mm
X.XXX	±0.05mm

UNSPECIFIED TOLERANCES

www.bodongkaiguan.net www.ksdkg.com

DSND		DATE		SCALE: N/A	MODEL TYPE: DC POWER JACK
DWN		DATE		VIEW:	PART NO.:
CHKD		DATE		UNIT: mm	DWG NO.: DC-022K-2.0
APPD		DATE		SIZE: A4	

KOSOD TECHNOLOGY CO., LTD

WEIGHT	SHEET	REVISION
1.0g	1/1	A0