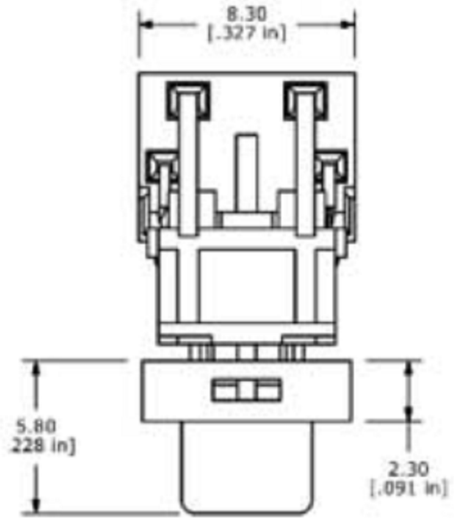

RoHS Compliant

LED Specifications				
	Blue	Green	Yellow	Red
Forward Current (mA)	20	20	20	20
Forward Voltage @20mA (V)	3.65-4.2	2.1-2.5	2.0-2.5	1.95-2.5
Luminous Intensity @10mA (mcd)	250	400	1800	1800

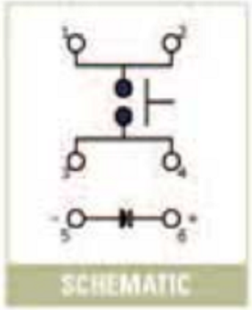

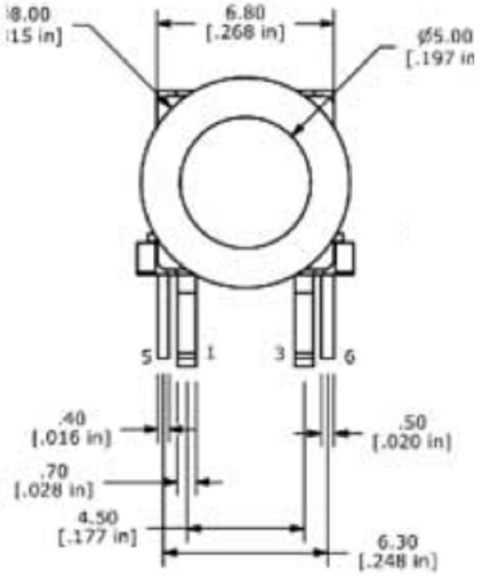

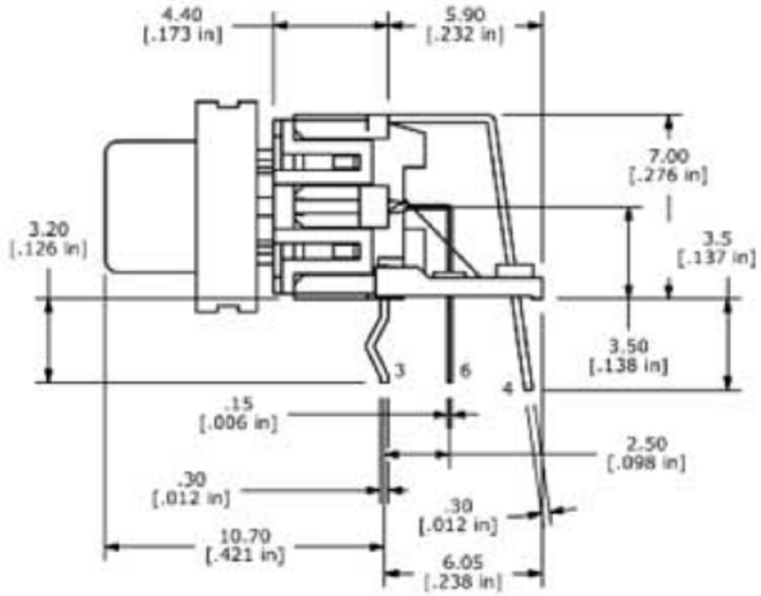

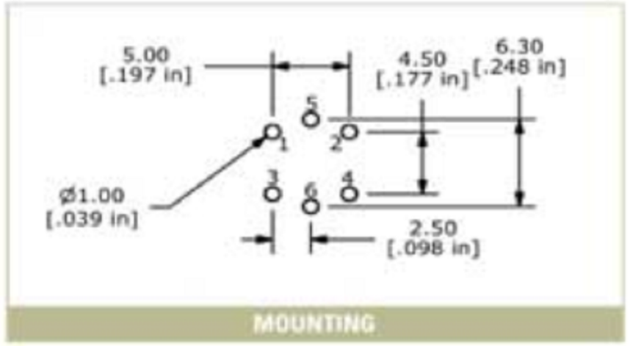

NO.	DESCRIPTION	QTY	MATERIAL	PLATING
7	CAP	1	ABS / PC	Black
6	LED	1		
5	FIXITY	1	PA66	Black
4	CONTACT	1	PHOSPHOR BRONZE	Ag plated
3	TERMINAL	2	BRASS	Ag plated
2	CASE	1	PA66	Black
1	KNOB	1	PA66	Black/White

ITEM NO.	DESCRIPTION	DRAWN	DATE

广东科斯达电子科技有限公司
GUANG DONG KE SI DA ELECTRONIC TECHNOLOGY CO., LTD.

TOLERANCE UNLESS OTHERWISE STATED : Up to 5 ±0.2; Above 5 ~ 15 ±0.3; Above 15 ~ 30 ±0.4; Above 30 ~ 50 ±0.5; Angle ±0.3°

3RD. ANGEL'S | UNITS | MM

DRAWN BY: Jack Lu	DATE 12/27/22	MAT'L		TITLE	SWITCH
CHECKED BY: Jacky Chen	DATE 12/27/22	FINISH		MODLE	TACT SWITCH WITH LED
APPROVED BY: Tony Kao	DATE 12/27/22	SCALE	1 : 1	DWG NO.	
		SHEET NO.	1 of 1	PART NO.	

SIZE A4 | VER R