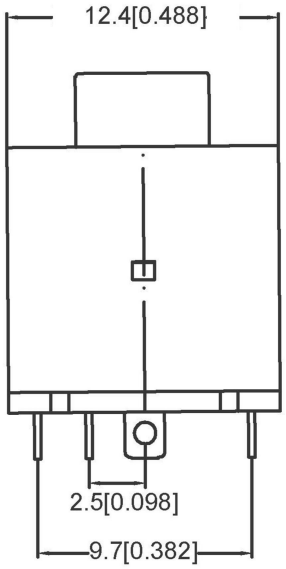

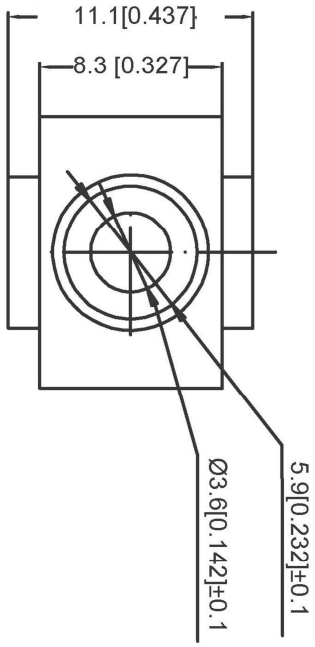

Temperature :	-20~70 C
温度：	-20~70 C
Rated Load:	DC 30V 0.3A
额定负载:	DC 30V 0.3A
Contact Resistance :	<0.03
接触电阻 :	<0.03
Insulation Resistance:	>100M
绝缘电阻:	>100M
Withstand Voltage :	AC500V(50Hz)/min
耐受电压 ：	AC500V(50Hz)/分钟
Actuating Force :	2.2~35N
驱动力：	2.2~35N
Life :	3000N
寿命:	3000N

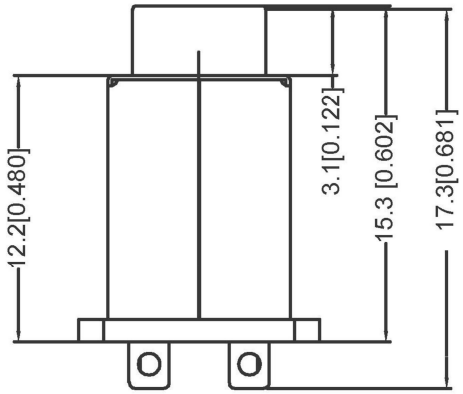

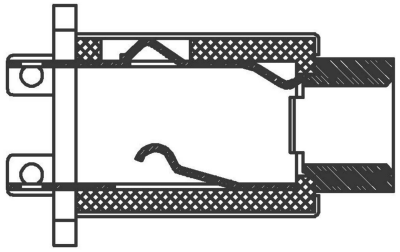

	MATERIAL	PLATING
termina 1	Phosphor Bronze	ag
termina 2	Phosphor Bronze	ag
termina 3	Phosphor Bronze	ag
termina 4	Phosphor Bronze	ag
terminal 5	Phosphor Bronze	ag
copper bush	Brass	tin
base	PBT	
cover	PA66	
Shell	SUS	
Plastic	PA66	

PIN	PJ-378-X	
Schematic	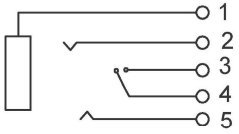	G:Green R:Red

				ANGLAR	±5°
				L≤ 4	±0.2
				4<L≤ 16	±0.3
				16<L≤ 63	±0.4
	DATE	REVISED	APPROVED	L> 63	±0.5
REVISIONS				UNSPECIFIED TOLERANCES	

WWW.BODONGKAIGUAN.NET WWW.CKJACK.COM WWW.KSDKG.COM

KSD SWITCH CONNECTOR

KE SI DA ELECTRONIC TECHNOLOGY CO., LTD

DSND		SCALE: N/A	MODEL TYPE: ERAPHONE SOCKET
DWN		VIEW:	PART NO.: PJ-378-X
CHKD		UNIT: mm/in	DWG NO.:
APPD		SIZE: A4	

WEIGHT	SHEET	REVISION
	1/1	A0