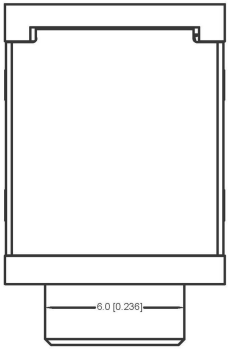

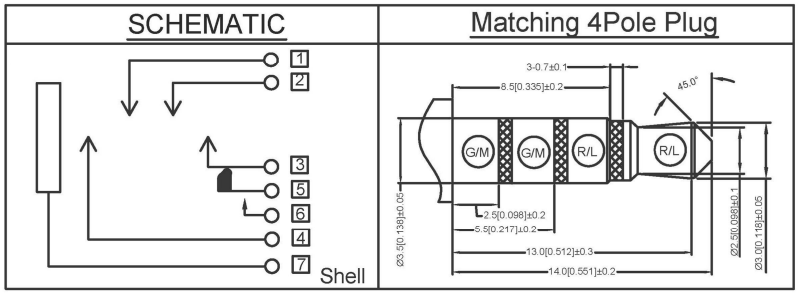

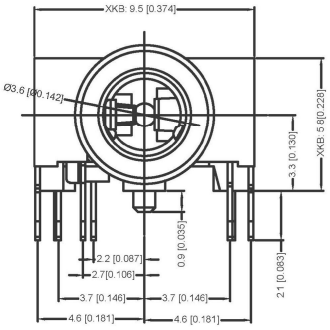

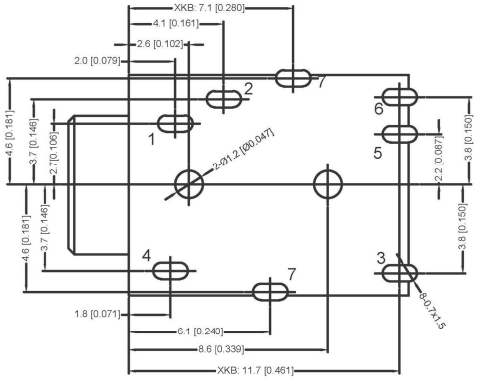

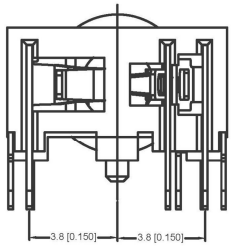

P.C.B LAYOUT TOP VIEW

SPECIFICATION
产品规格

1.Rating: DC 30V 0.5A
额定值: DC 30V 0.5A
2.Contact resistance :<30mΩ;
接触电阻:<30mΩ;
3.Insulation resistance: >100MΩ(DC250V)
绝缘电阻: >100MΩ(DC250V)
4.Withstand voltage :500VAC;
耐受电压: 500VAC;
5.Insertion and extraction force: 3-30N;
插拔力: 3-30N;
6.life test:5,000 cycles.
寿命试验：5000次循环.

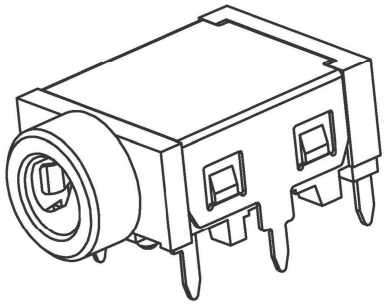

NO.	DESCRIPTION	QTY	MATERIAL	PLATING
9	HOUSING	1	PA9T	Black
8	INSULATER	1	PA9T	Black
7	SHELL	1	SUS301 T=0.20mm	NI-Plating
6	TERMINAL-6	1	COPPER ALLOY T=0.20mm	GOLD FLASH ALL. OVER Ni40U"
5	TERMINAL-5	1	COPPER ALLOY T=0.20mm	
4	TERMINAL-4	1	COPPER ALLOY T=0.20mm	
3	TERMINAL-3	1	COPPER ALLOY T=0.25mm	
2	TERMINAL-2	1	COPPER ALLOY T=0.20mm	
1	TERMINAL-1	1	COPPER ALLOY T=0.20mm	

				ANGLAR	±5°
				L≤ 4	±0.2
				4<L≤ 16	±0.3
				16<L≤ 63	±0.4
	DATE	REVISED	APPROVED	L> 63	±0.5
REVISIONS				UNSPECIFIED TOLERANCES	

WWW.BODONGKAIGUAN.NET WWW.CKJACK.COM WWW.KSDKG.COM

KSD SWITCH CONNECTOR

KE SI DA ELECTRONIC TECHNOLOGY CO., LTD

DSND		SCALE: N/A	MODEL TYPE: 3.5 PHONE JACK
DWN		VIEW:	PART NO.: PJ-3401
CHKD		UNIT: mm/in	DWG NO.:
APPD		SIZE: A4	

WEIGHT	SHEET	REVISION
	1/1	A0