REV	ECN NO	DESCRIPTION	DATE	NAME
A	———	NEW	5/4-'20	HXY

RoHS

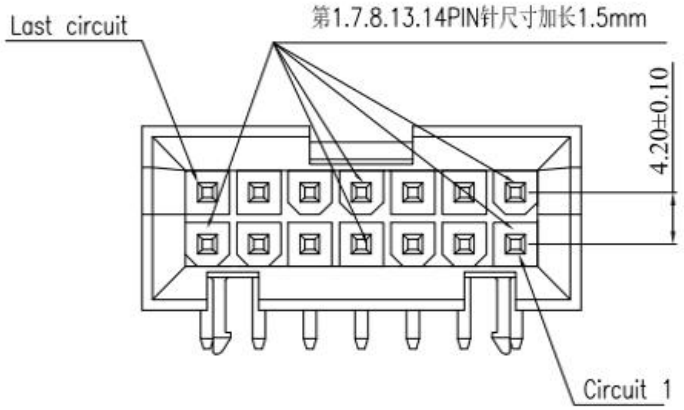

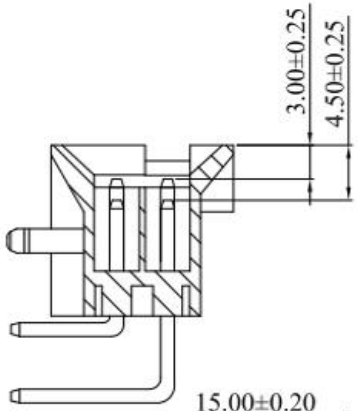

SPECIFCATIONS;

CURRENT RATING:7A AC,DC
VOLTAGE RATING:600V AC,DC
TEMPERATURE RANGE:-25℃~+85℃
TEMPERATURE:20mΩ MAX.
INSULATION RESISTANCE:1000MΩ MIN.
WITHSTANDING VOLTAGE:1500V AC/MINUTE
MATERIAL:NY66 UL94V-0 Natural
PIN MATERIAL:BRASS
PLATING:80u" MIN TIN PLATING
NICKEL PLATED WITH 30-60U"

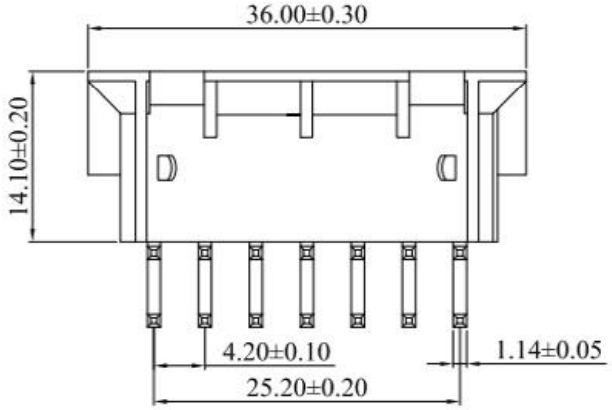

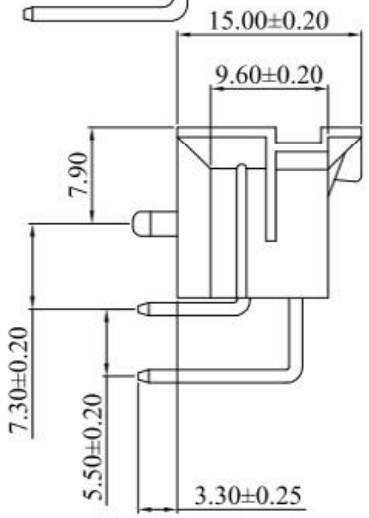

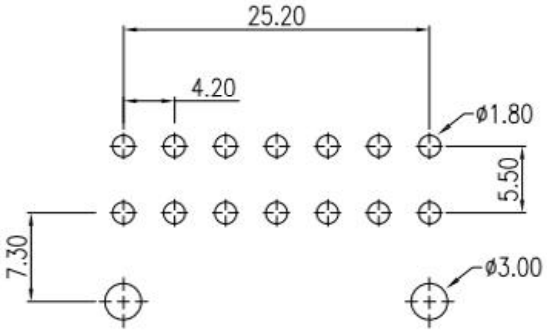

PCB LAYOUT:Component Side
Recommended PCB Thickness 1.78MAX

Ordering Information

P数
1、单排
2、双排
0、180°
1、90°
2、SMT
3、卧贴
9、反位立贴
2、
3、NY6T
4、LCP
5、NY66
6、
7、NY46
8、PA9T
0、无
1、打"K"点
2、
3、带柱
4、
5、直背
6、弯背
流水号
A袋装
B管装
C盘装
D卷装

TOLERANCE UNLESS OTHERWISE SPECIFIED	
LINER	ANGLES
.0 ±0.30	0.° ±3°
.00 ±0.20	.0° ±2°
.000 ±0.10	.00° ±1°

广东科斯达开关厂

TITLE	WAFER-X PH4.2 2X7P 90°带柱 实心针	DRAWN BY	HXY	5/4-'20	
PART NO		CHECKED BY			
DRAWING NO	———	APPROVED BY			
SCALE 1:1	UNIT mm	PAGE 1/1	SIZE A4		