RoHS Compliant

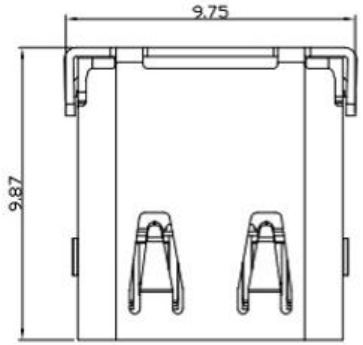

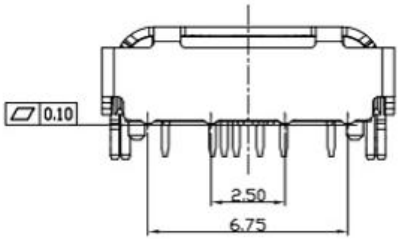

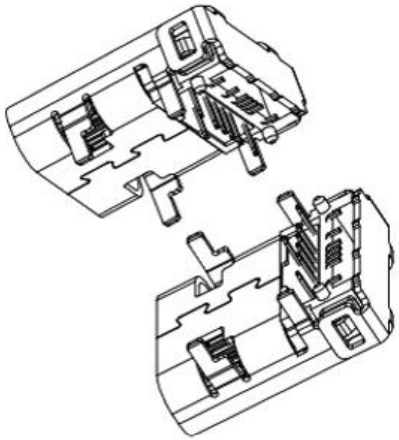

NOTES:

1. ELECTRICAL:
   1) CURRENT RATING: 3AMP MAX;
   2) INSULATION RESISTANCE: 100MΩ MIN;
   3) CONTACT RESISTANCE: 40mΩ MAX;
   4) WITHSTANDING VOLTAGE: 100V AC;
   5) OPERATING TEMPERATURE:-30°C TO +85°C.
2. Mechanical:
   1) Mating Force: 5N~20N
   2) Unmating Force: 8N~20N
   3) Durability: 10,000 cycles
3. DIMENSIONS MARKED "▼" TO BE CHECKED BY Q.C & IPQC.

4.PART NO.

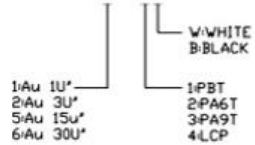

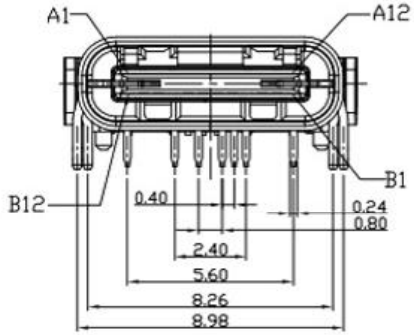

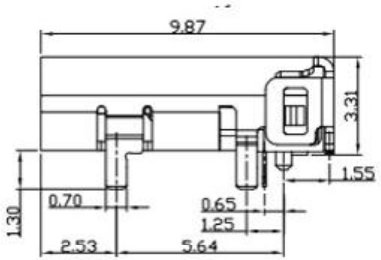

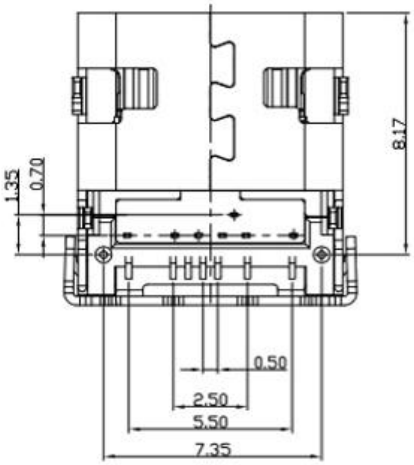

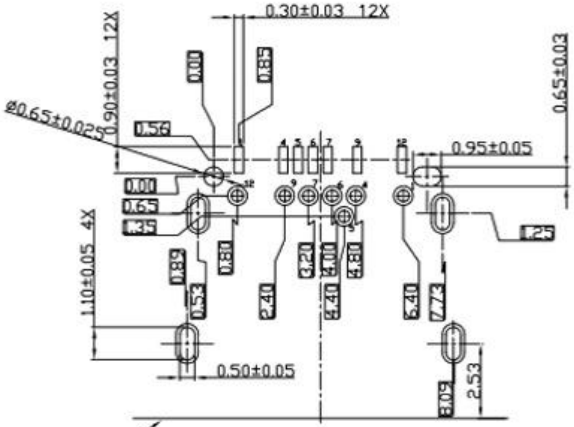

CONNECTOR FRONT EDCE

RECOMMENDED P.C.B. LAYOUT (T:1.00mm)
TOLERANCE UNSPECIFIED ±0.05mm

A1	GND	B12	GND
A4	VBUS	B9	VBUS
A5	CC1	B7	DN2
A6	DP1	B6	DP2
A7	DN1	B5	CC2
A9	VBUS	B4	VBUS
A12	GND	B1	GND
PIN	SIGNAL NAME	PIN	SIGNAL NAME

NO.	PART NAME	QTY	MATERIAL	DESCRIPTION	REMARK
⑤	MID PLATE	1	STAINLESS STEEL	Au . PLATING.	T=0.15mm
④	SHELL	1	STAINLESS STEEL	Au . PLATING.	T=0.30mm
③	TERMINAL-B	1	TABLE 2:	TABLE 2:	T=0.12mm
②	TERMINAL-A	1			T=0.12mm
①	INSULATOR	1	HIGH TEMP	Black	

UNLESS OTHERWISE, GENERAL TOLERANCE:
X.xxx ±0.10
X.xx ±0.20
X.x ±0.30
X. ±0.38
ANGULAR:
X.xx ±1°
X.x ±3°
X. ±5°

广东科斯达开关厂

TITLE: USB connector

P/N: Detail See PART NO. LIST
MODEL:
DRAW NO.:

THIRD ANGLE PROJECTION

UNIT:	SCALE:	SIZE:	SHEET:
mm	1:1	A4	1/1

ECN NO.	REV.	DESCRIPTION	DATE	CHANGE				
JH2016-080	X2	随工程图上升版本次	2016.06.15	陈少兵	DESIGN	陈少兵	2016.06.15	
JH2016-071	X1	新增规格	2016.06.10	陈少兵	CHECK	郑小伟	2016.06.15	
20151224001	X	NEW DRAWING	2016.05.05	陈少兵	APPROVAL	吕海涛	2016.06.15	