RoHS Compliant

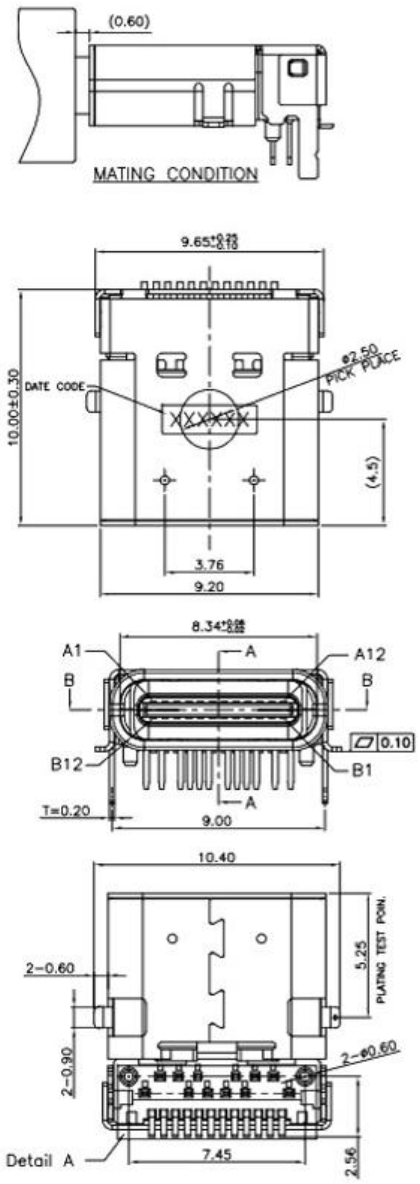

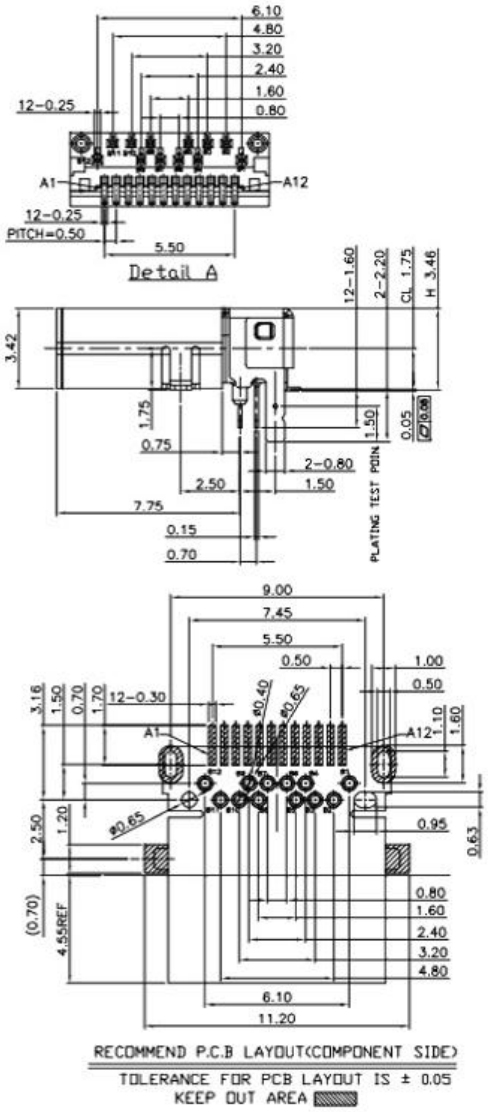

NOTES:

1.ELECTRICAL CHARACTERISTICS:
- 1)CURRENT RATING: 5A FOR COLLECTIVELY POWER SUPPLY PIN (PINA1,A4,A9,A12,B1,B4,B9,B12); 1.25A FOR VCONN PIN; 0.25A FOR OTHER SIGNAL PIN.
- 2)INSULATION RESISTANCE: 100MΩ Min
- 3)CONTACT RESISTANCE: 40mΩ Max FOR INITIAL. 10mΩ CHANGE AFTER TEST. MEASURE AT 20mV, 100mA.
- 4)WITHSTANDING VOLTAGE: 100V AC R.M.S.
- 5)OPERATING TEMPERATURE: -40°C ~85°C

2.MECHANICAL CHARACTERISTICS:
- 1)MATING FORCE: 5N~20N
- 2)UNMATED FORCE: 8N~20N INITIAL TEST; 6N~20N DURABILITY AFTER TEST
- 3)DURABILITY: 10,000 CYCLES

4.DIMENSIONS MARKED '▼' TO BE CHECKED BY Q.C & IPQC.

4.PART NO.

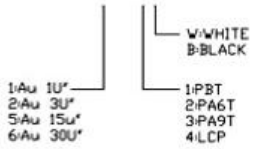

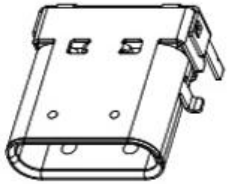

Pin	Signal Name	Mating Sequence	Pin	Signal Name	Mating Sequence
A1	GND	First	B12	GND	First
A2	SSTXp1	Second	B11	SSRXp1	Second
A3	SSTXn1	Second	B10	SSRXn1	Second
A4	VBUS	First	B9	VBUS	First
A5	CC1	Second	B8	SBU2	Second
A6	Dp1	Second	B7	Dn2	Second
A7	Dn1	Second	B6	Dp2	Second
A8	SBU1	Second	B5	CC2	Second
A9	VBUS	First	B4	VBUS	First
A10	SSRXn2	Second	B3	SSTXn2	Second
A11	SSRXp2	Second	B2	SSTXp2	Second
A12	GND	First	B1	GND	First
SHELL		GND	SHELL		GND

NO.	PART NAME	QTY	MATERIAL	DESCRIPTION	REMARK
⑤	MID PLATE	1	STAINLESS STEEL	Au . PLATING.	T=0.15mm
④	SHELL	1	STAINLESS STEEL	Au . PLATING.	T=0.30mm
③	TERMINAL-B	1	TABLE 2:	TABLE 2:	T=0.12mm
②	TERMINAL-A	1			T=0.12mm
①	INSULATOR	1	HIGH TEMP	Black	

UNLESS OTHERWISE, GENERAL TOLERANCE:
X.xxx ±0.10
X.xx ±0.20
X.x ±0.30
X. ±0.38
ANGULAR:
X.xx ±1°
X.x ±3°
X. ±5°

广东科斯达开关厂

TITLE: USB connector

P/N: Detail See PART NO. LIST
MODEL:
DRAW NO.:

THIRD ANGLE PROJECTION

UNIT:	SCALE:	SIZE:	SHEET:
mm	1:1	A4	1/1

ECN NO.	REV.	DESCRIPTION	DATE	CHANGE				
JH2016-080	X2	随工程图上升版本次	2016.06.15	陈少兵	DESIGN	陈少兵	2016.06.15	
JH2016-071	X1	新增规格	2016.06.10	陈少兵	CHECK	郑小伟	2016.06.15	
20151224001	X	NEW DRAWING	2016.05.05	陈少兵	APPROVAL	吕海涛	2016.06.15	