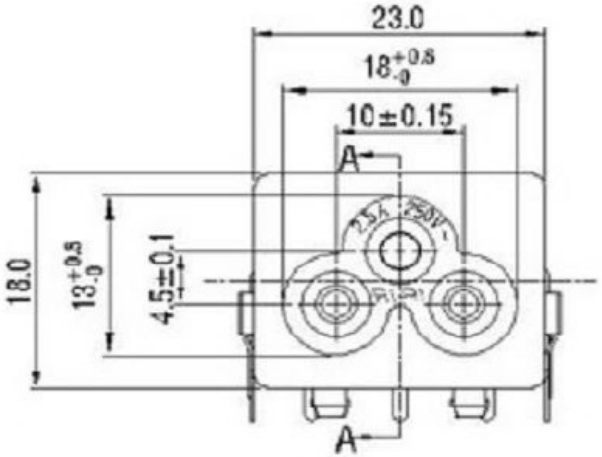

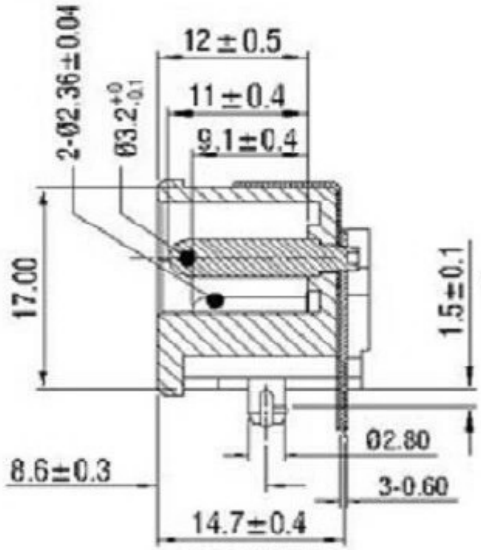

SECTION A-A

SPEC:

A. Material:

1. Housing: PA66(HP)
2. Terminal: COPPER ALLOY, TIN PLATED

B. Electrical Characteristics:

1. Rating: 2.5A 250V ~ (UL, CUL, VDE, CCC, SEMKO, DEMKO, FIMKO, NEMKO)
2. Electric Strength: AC 2,000 V FOR ONE MINUTE
3. Insulation Resistance: 100MΩ MIN. AT 500V DC

C. Approvals:

UL, CUL, VDE, CCC, SEMKO, DEMKO, FIMKO, NEMKO

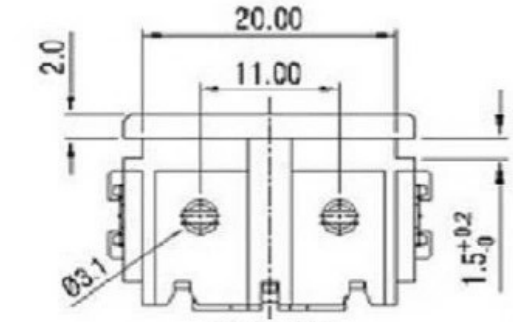

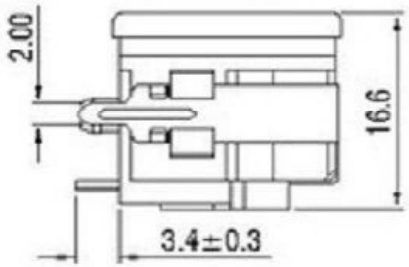

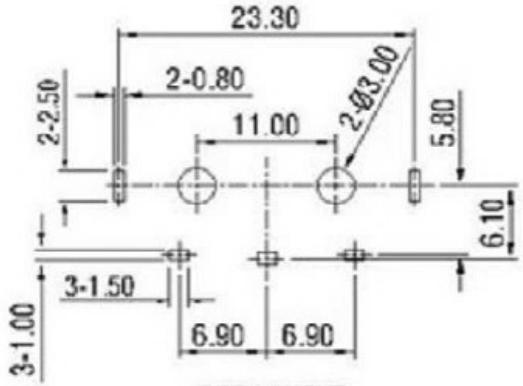

PCB LAYOUT

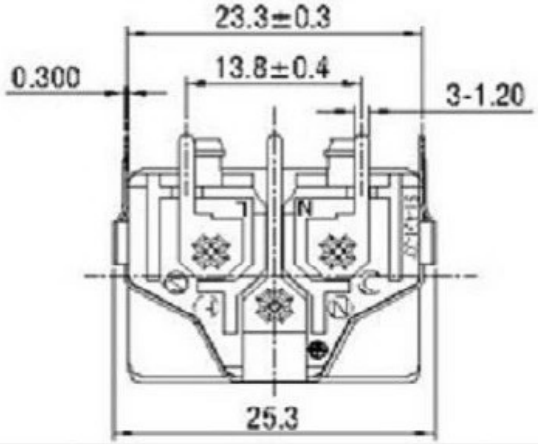

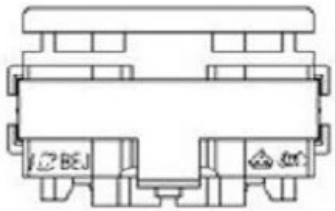

REV.	DATE	REVISION DESCRIPTION	ISSUE

普通公差
COMMON TOLERANCE :

UP TO 5	±0.20
ABOVE 5 TO 30	±0.30
ABOVE 30	±0.50
ANGULAR	±5°

广东科斯达电子科技有限公司
Guang dong Keside Electronic Technology Co., Ltd.

单 位 UNIT	mm	投 影 PROJECTED		品 名 PRODUCT NAME	AC power socket
绘 图 DRAWN BY	林晓良	核 对 CHECKED BY	张 平	型 号 MODEL NO.	
日 期 DATE	19. 08. 12	核 准 APPROVAL BY	周培雷	料 号 PART NO.	KSD-AC JACK