ZONE	SYMBOL	REVISION	APPROVAL	DATE

RoHS Compliant

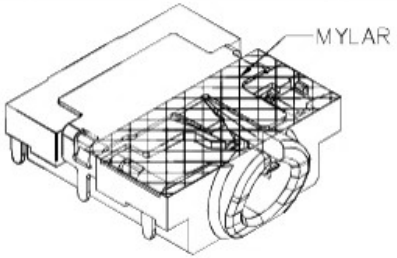

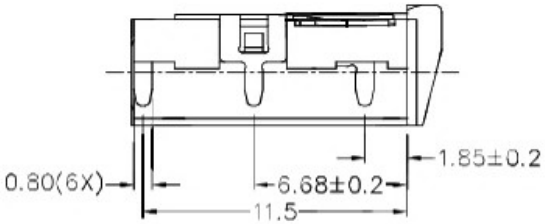

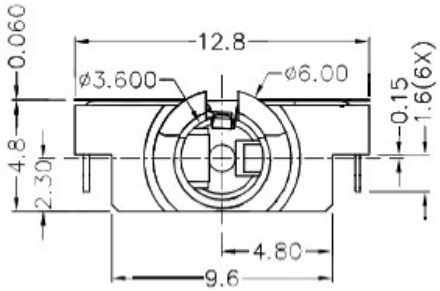

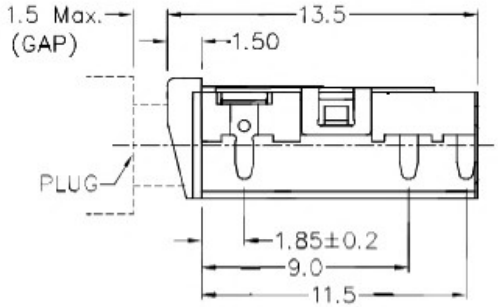

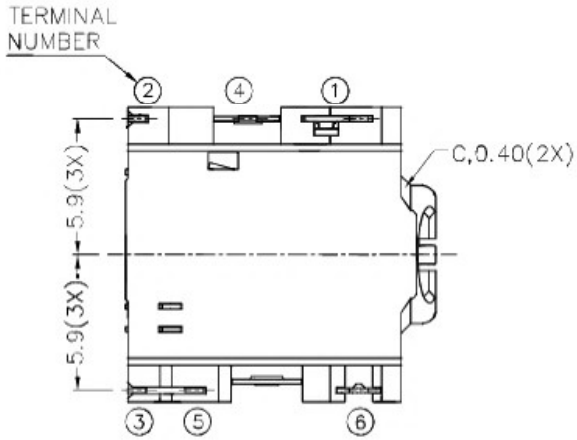

✳ MATERIAL

TERMINAL 1	: COPPER ALLOY
TERMINAL 2	: COPPER ALLOY
TERMINAL 3	: COPPER ALLOY
TERMINAL 4	: COPPER ALLOY
TERMINAL 5	: COPPER ALLOY
TERMINAL 6	: COPPER ALLOY
HOUSING	: HIGH TEMP. PLASTIC
MYLAR	: POLYMIDE

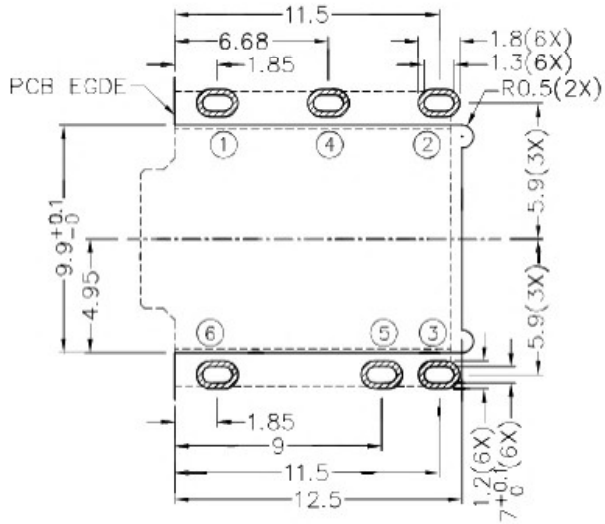

RECOMMENDED PCB LAYOUT
TOLERANCE: ±0.05
(TOP VIEW)

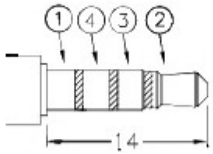

ø3.5 MATE PLUG

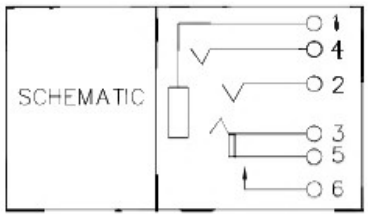

广东科斯达开关厂

DESIGN	H.L.TAN	DATE	14-8-2012	SCALE	3:1
DRAWING	CH.XIONG	DATE	19-1-2017	MATERIAL	✳
CHECK	T.Y.LI	DATE	19-1-2017	DWG. NO.	TZ\SH555DT1-A/1.0
APPROVAL		DATE		SHEET	

PART NAME	3.5mm SMD STEREO JACK	TOLERANCE UNLESS OTHERWISE SPECIFIED:	0.0±0.2 0.00±0.1 0.000±0.05	UNIT: mm
PART NO.				