ZONE	SYMBOL	REVISION	APPROVAL	DATE

RoHS Compliant

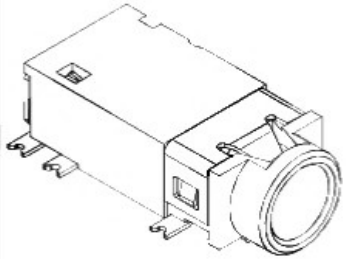

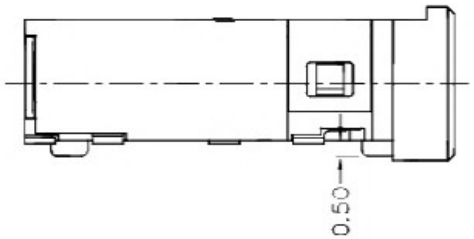

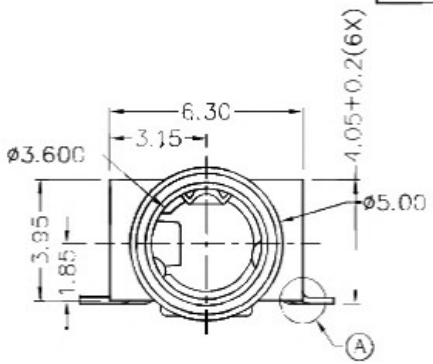

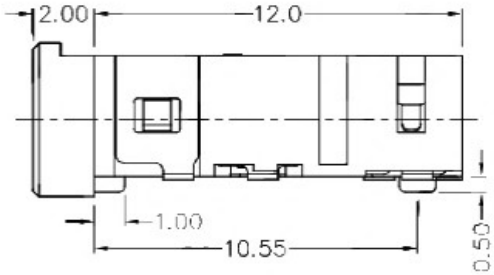

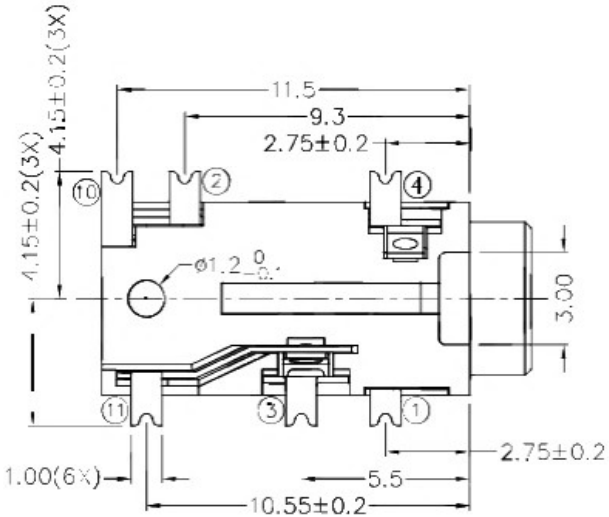

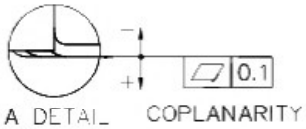

* MATERIAL

TERMINAL 1 : COPPER ALLOY
TERMINAL 2 : COPPER ALLOY
TERMINAL 3 : COPPER ALLOY
TERMINAL 4 : COPPER ALLOY
TERMINAL 10 : COPPER ALLOY
TERMINAL 11 : COPPER ALLOY
HOUSING : HIGH TEMP. PLASTIC

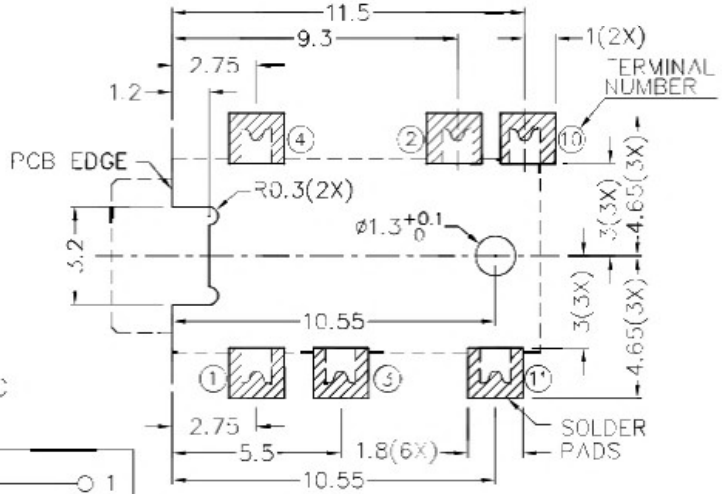

RECOMMENDED PCB LAYOUT
TOLERANCE: ±0.05
(TOP VIEW)

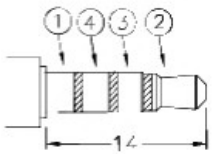

ø3.5 MATE PLUG

SCHEMATIC

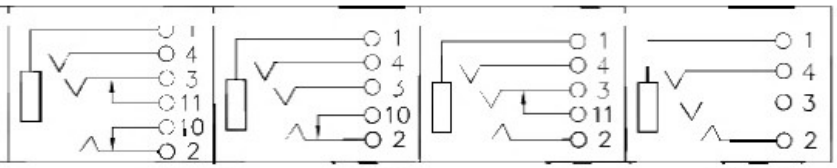

广东科斯达开关厂	DESIGN	T.Y.LI	DATE	29-9-2006	SCALE	4:1
	DRAWING	J.CHIOU	DATE	5-1-2017	MATERIAL	*
PART NAME: 3.5mm SMD STEREO JACK	TOLERANCE UNLESS OTHERWISE SPECIFIED: 0.0±0.2, 0.00±0.1, 0.000±0.05	UNIT: mm	CHECK	H.L.TAN	DATE	5-1-2017	DWG. NO.	TZ\SH395D-A/1.0
PART NO.			APPROVAL		DATE		SHEET	