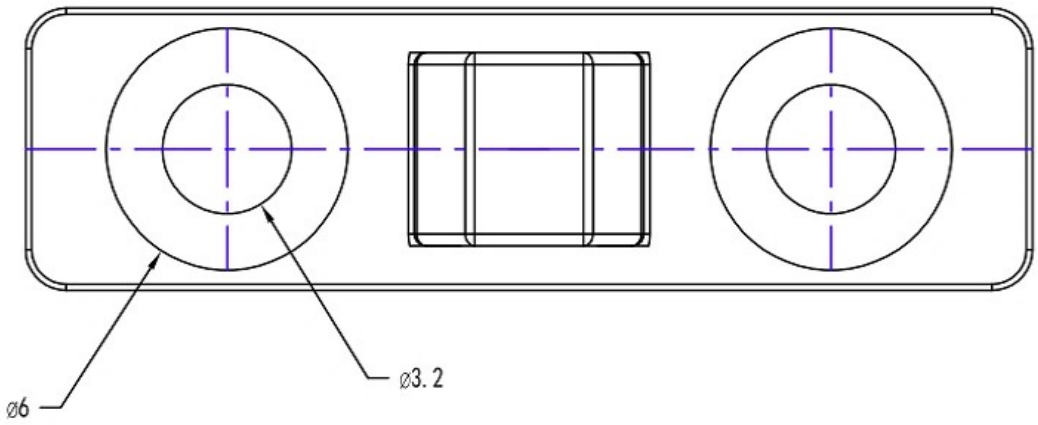

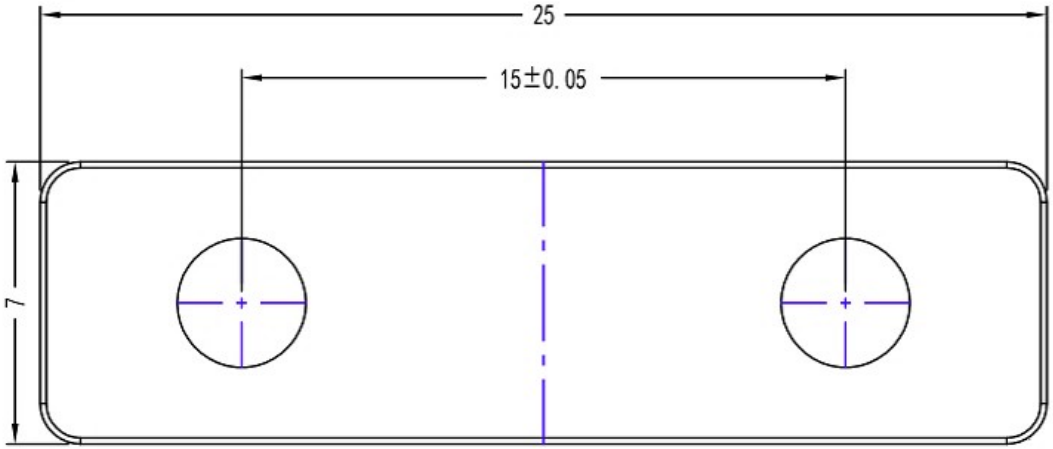

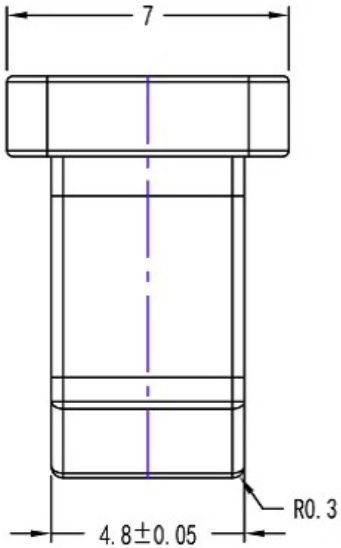

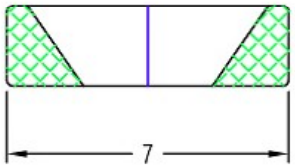

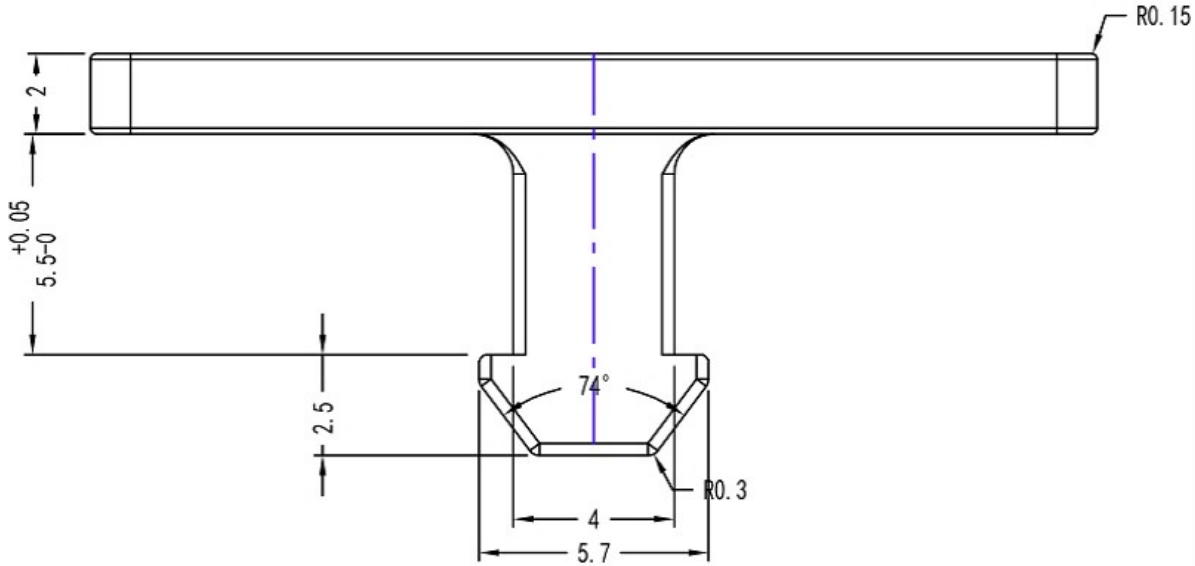

TITLE	DOOR LATCH SWITCH	DRAWN		TOLERANCE OTHERWISE UNLESS SPECIFIED		8				
PART NO.	Lock switch	CHECKED				7				
DRAW NO.		APPROVED		UP TO 5	±0.2	6				
				ABOVE 5 ~ 30	±0.3	5				
				ABOVE 30 ~ 50	±0.4	4				
SCALE: 2:1	UNIT: mm	DATE:		ABOVE 50	±0.5	3	SPRING	SUS	1	Ni PLATED
				ANGLE	±3°	2	HOUSING	POM	1	BLACK
						1	SLIDER	PA12	1	BLACK
						NO.	PARTS	MATERIAL	QTY.	FINISHING

广东科斯达开关厂

WWW.KSDKG.COM WWW.BODONGKAIGUAN.NET